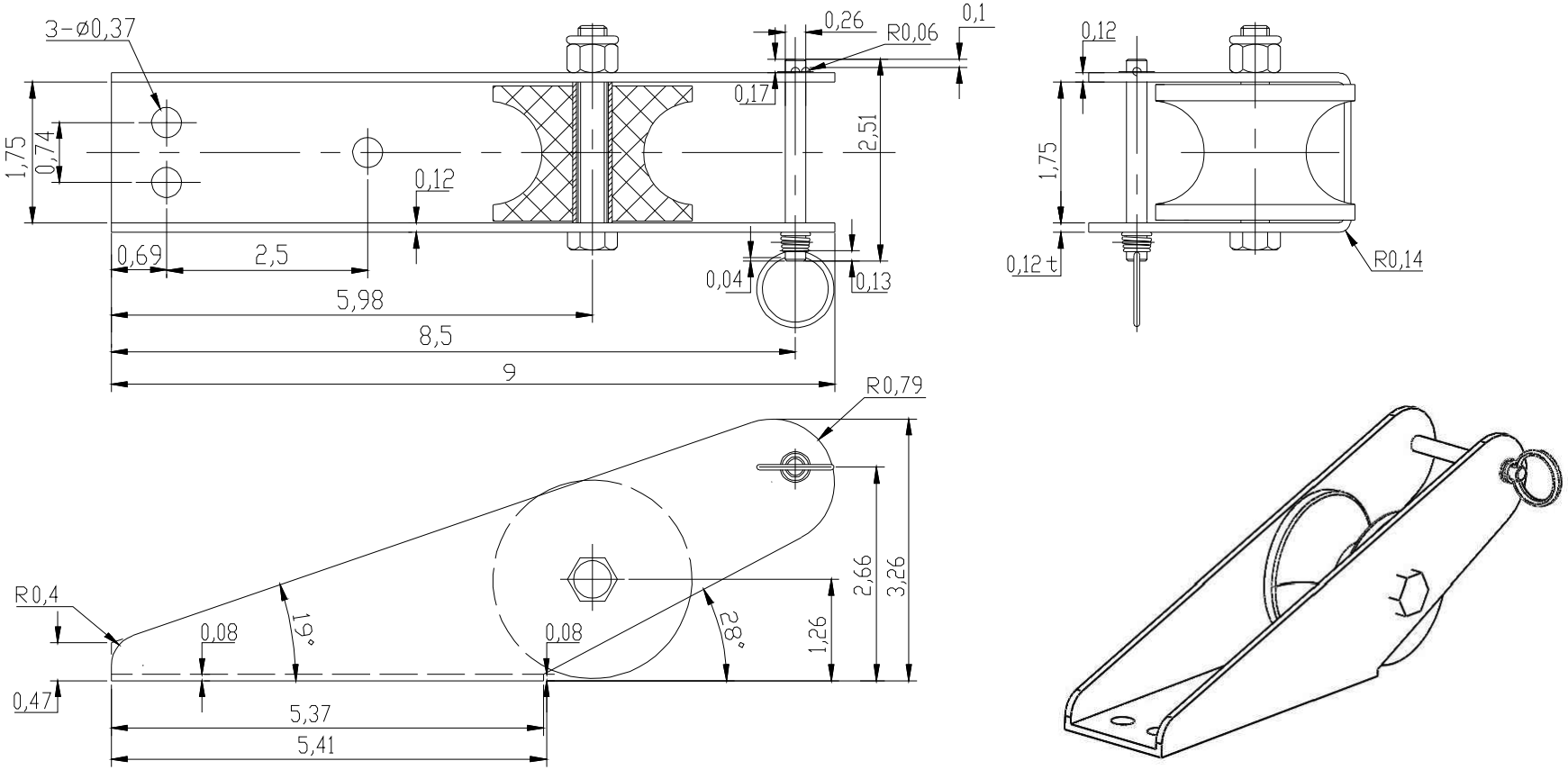

Whitecap			
Units	Inches	View	
P/N	AR-6483		20180810